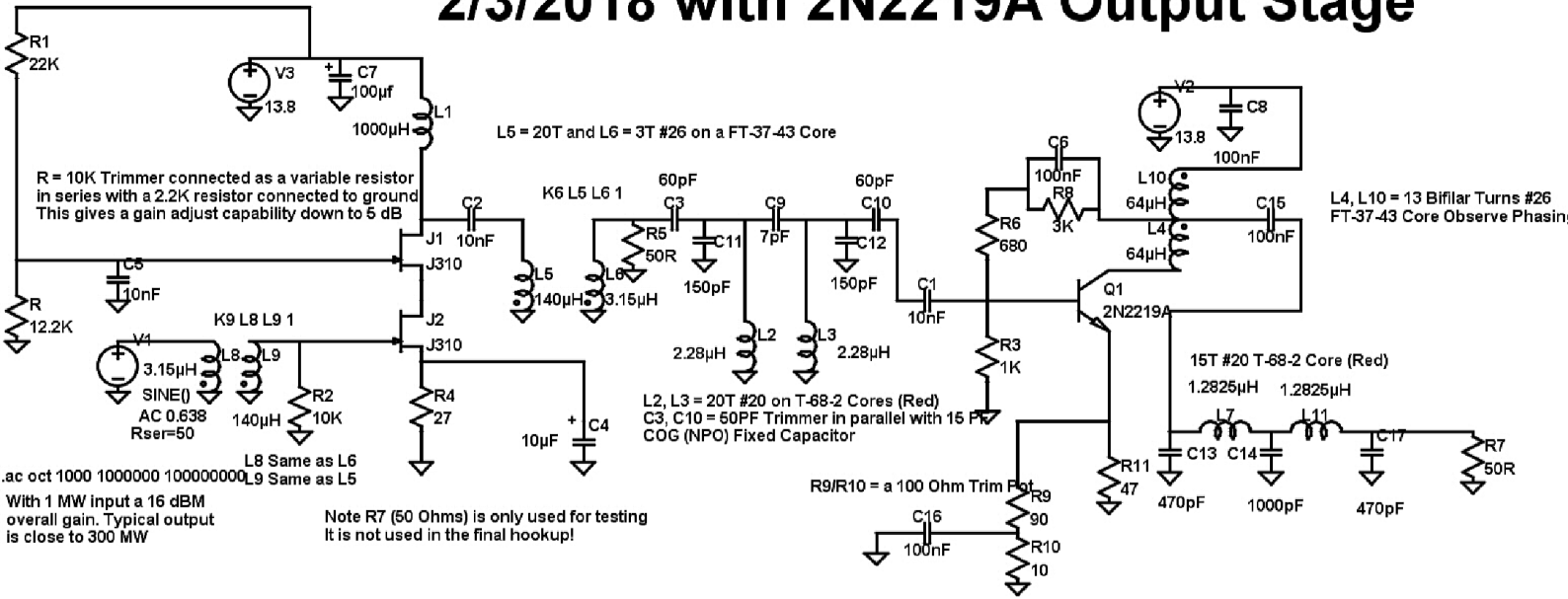40M Driver Amp ~ IC Transceiver
N6QW Modified Redesign
2/3/2018 with 2N2219A Output Stage